LACELA

Product: Electric Art. No. 23023

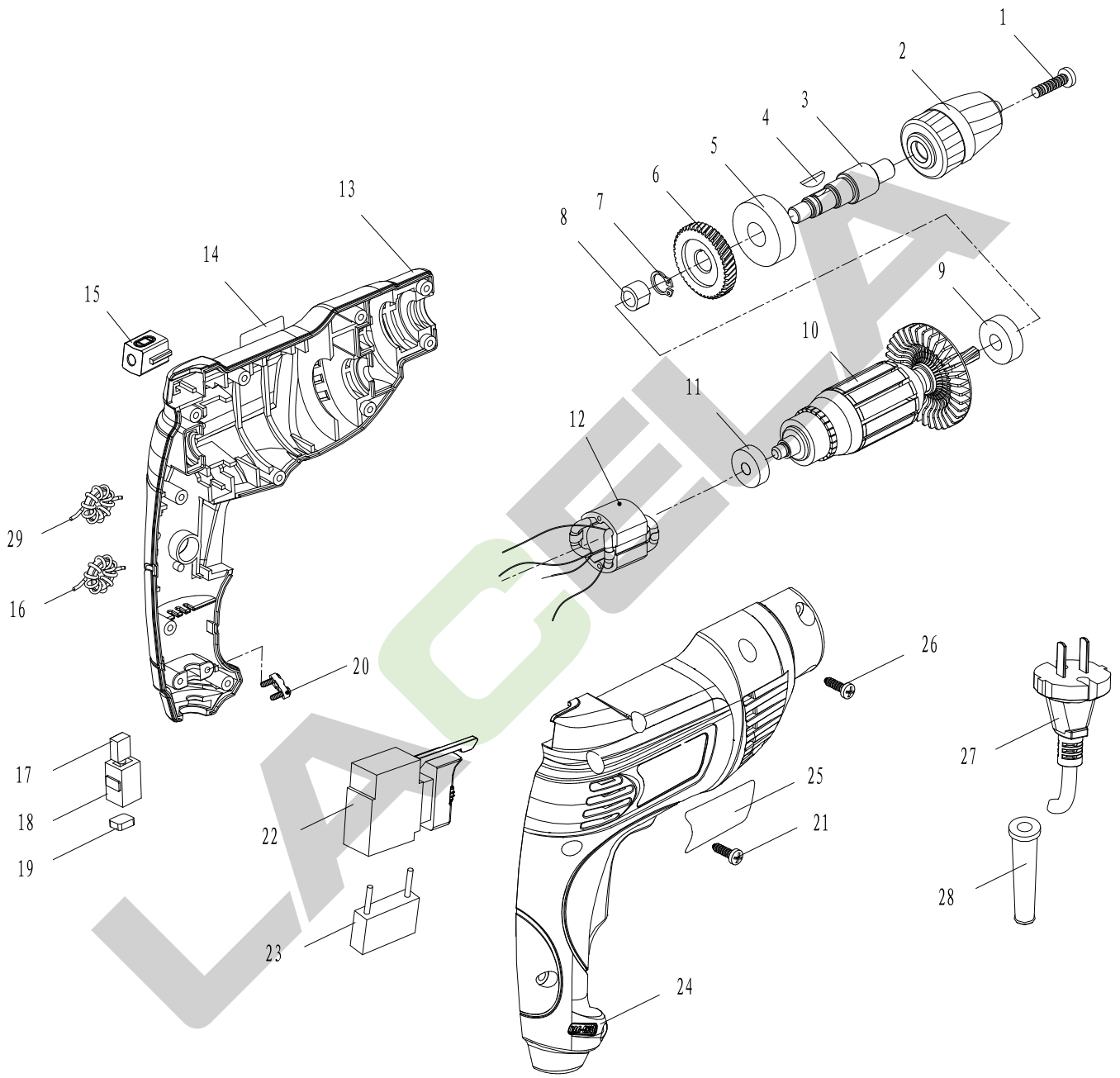

Version No.	D	Enable Time	2022.9

LACELA

Product:Electric Drill Art.No.231023

No.	Part Name(Chinese)	Part Name(English)	Code	No.	Part Name(Chinese)	Part Name(English)	Code	Qty
1	螺钉M5×20-LH	Screw M5×20-LH	30201073	1				
2	钻夹头	Chuck	10304001032	1				
3	输出轴	Output Spindle	10301001042	1				
4	半圆键3×3.7×10	Woodruff Key 3×3.7×10	30601004	1				
5	轴承6201	Bearing 6201	30104036	1				
6	大齿轮	Gear	10302004057	1				
7	轴用弹性挡圈10	Circlip For Shaft 10	30301022	1				
8	含油轴承8×12×8	Bearing 8×12×8	30102032	1				
9	轴承608	Bearing 608	30103045	1				
10	转子	Armature	10502001082	1				
11	轴承626	Bearing 626	30104046	1				
12	定子	Stator	10501001065	1				
13	左机壳	Left Housing	10101002092	1				
14	商标	Trademark	20402007031	1				
15	水泡	level	10101011030	1				
16	电感	Inductance	10604001058	1				
17	碳刷	Carbon brush	10605001029	2				
18	刷架	Brush Holder	10606001019	2				
19	刷盖	Brush Cap	10606001017	2				
20	电缆压板	Cord Anchor	10101011123	1				
21	自攻螺钉ST4×14	Screw ST4×14	30202019	1				
22	开关	Switch	10601001025	1				
23	电容	Capacitor	10603001005	1				
24	右机壳	Right Handle	10101002091	1				
25	铭牌	Trademark	20302007113	1				
26	自攻螺钉ST4×16	Screw ST4×16	30202022	9				
27	电源线2×0.75	Cord 2×0.75	10602006131	1				
28	电缆护套	Cord Sleeve	10102001039	1				
29	电感	Inductance	10604001059	1				

Version No.	D	Enable Time	2022.9